Standard Assembly Unit Installation Data:

- Designed for gravity flow and dilute phase pneumatic conveying systems.
- **Connections**: Inlet and outlet have a DIN PN10 flange pattern with blind tapped holes for flange connection.
- **Actuation**: Double acting air cylinder. The air cylinder requires a minimum of 80 psig [5.4 bar], filtered, compressed air for most reliable service. Air lubrication is not required but is recommended for extended wear life.
- **Air Control**: A 2 position, 4 way lever or solenoid operated compressed air control is required to operate the air cylinder.
- **Temperature**: Base model rated at 180º f [82º c] continuous service, 250º f [121º c] intermittent (10 minutes maximum). Higher temperatures can be achieved with high temperature modifications.
- **Air Usage**: Calculated at 80 psig [5.4 bar] for 1 open or 1 closed stroke of the air cylinder.
- **Hardware**: Imperial models contain imperial hardware & metric models contain metric hardware.
- **Avoid supporting conveying lines and equipment exceeding 200 lbs [90kg] with the diverter gate valve.**

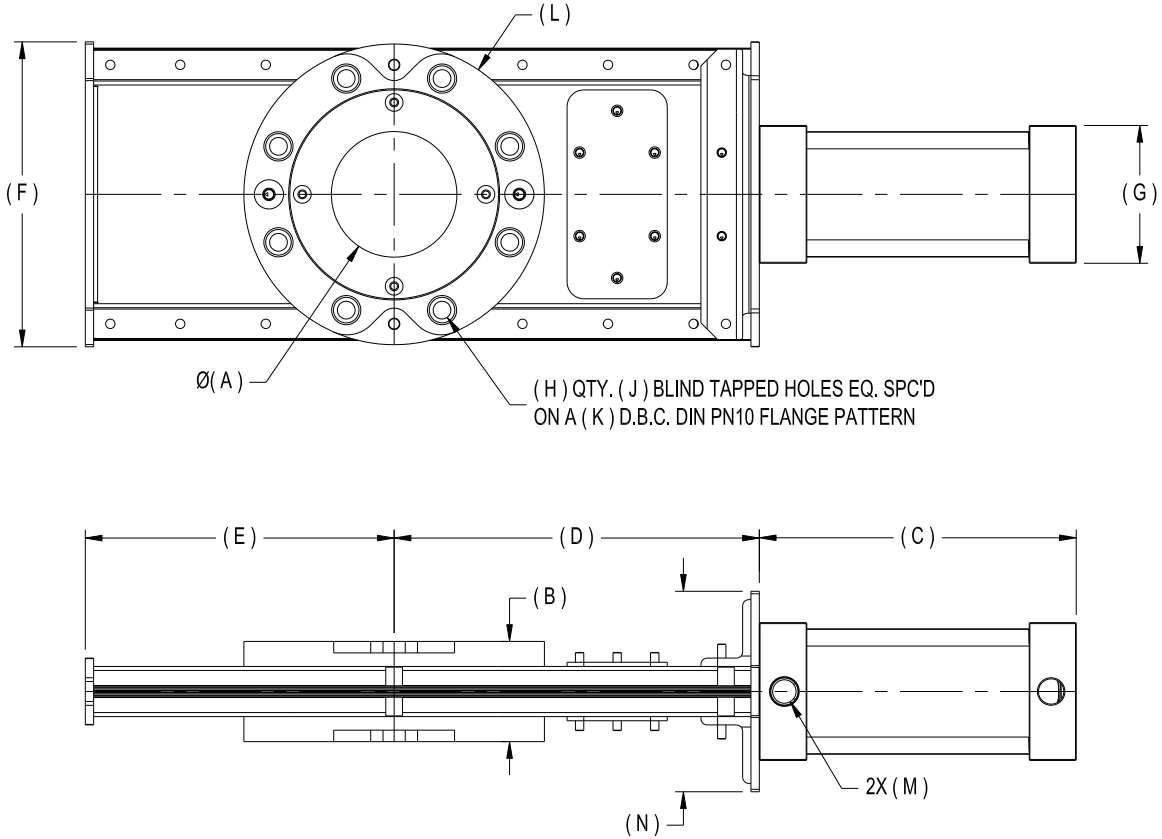

BASE VALVE	A		B		C		D		E		F		G		H	J	K		L		M		N		CV	KV	AIR USAGE		WEIGHT	
Imperial / Metric Model (F,G,J)	in	mm	in	mm	in	mm	in	mm	in	mm	in	mm	in	mm			in	mm	in	mm	NPT	G	in	mm			SCF	l	Lbs	Kg
GRA02-DIN / GRA50-DIN	1 3/4	45	3 3/8	86	6 3/4	171	7 1/2	189	6	152	7 1/8	181	3 1/2	87	4	M16-2.0	4 7/8	125	6 1/4	159	3/8	3/8	4 1/2	114	1.0	0.86	0.080	2.27	22	10
GRA02.5-DIN / GRA65-DIN	2 1/4	57	3 3/8	86	8 1/2	216	8 7/8	225	7 7/8	200	8 1/8	206	4 1/8	105	4	M16-2.0	5 3/4	145	7 1/4	184	1/2	1/2	5	127	1.0	0.86	0.143	4.05	32	15
GRA03-DIN / GRA80-DIN	2 3/4	70	3 3/8	86	8 1/2	216	8 7/8	225	7 7/8	200	8 1/8	206	4 1/8	105	8	M16-2.0	6 1/4	160	7 3/4	196	1/2	1/2	5	127	1.0	0.86	0.143	4.05	32	15
GRA04-DIN / GRA100-DIN	3 3/4	96	3	76	9 1/2	241	11	278	9 1/4	235	9 1/8	232	5 1/8	130	8	M16-2.0	7 1/8	180	9	229	1/2	1/2	6	152	1.4	1.20	0.302	8.55	38	17
GRA05-DIN / GRA125-DIN	4 7/8	123	3 1/2	89	10 1/2	266	12 1/2	317	10 7/8	276	10 1/8	257	5 1/8	130	8	M16-2.0	8 1/4	210	10	254	1/2	1/2	6	152	1.4	1.20	0.362	10.25	42	19
GRA06-DIN / GRA150-DIN	5 7/8	149	3 1/2	89	11 3/4	298	14	358	12 3/8	314	11 1/8	283	5 1/2	140	8	M20-2.5	9 1/2	240	11	279	1/2	1/2	6 1/8	156	2.6	2.22	0.515	14.58	50	23
GRA08-DIN / GRA200-DIN	7 7/8	199	3 1/2	89	13 3/4	349	17	432	15 3/8	391	13 1/8	333	5 1/2	140	8	M20-2.5	11 5/8	295	13 3/8	340	1/2	1/2	6 1/8	156	2.6	2.22	0.662	18.75	61	28
GRA10-DIN / GRA250-DIN	9 7/8	250	4 3/8	111	16 3/4	424	20	508	18 3/8	487	15 1/4	387	6 1/2	165	12	M20-2.5	13 3/4	350	15 1/2	395	1/2	1/2	7 1/8	181	2.6	2.22	1.155	32.70	95	43
GRA12-DIN / GRA300-DIN	11 7/8	301	4 3/8	111	18 3/4	475	23	584	21 3/8	543	17 3/8	441	6 1/2	165	12	M20-2.5	15 3/4	400	18 3/4	476	1/2	1/2	7 1/8	181	2.6	2.22	1.365	38.65	115	52
GRA14-DIN / GRA350-DIN	13 7/8	352	4 5/8	117	20 3/4	526	26 1/2	672	24 3/8	619	19 3/8	492	6 1/2	165	16	M20-2.5	18 1/8	460	20 1/2	521	1/2	1/2	7 1/8	181	2.6	2.22	1.575	44.60	145	66

*Information subject to change without notice | Above information is Vortex standard dimensional information | Contact us if your application needs a non-standard valve | Available specifications and modifications available at www.vortexvalves.com

© DMOGDIN-0912